Harvia Cilindro 20

Wood burning sauna heater
Instructions for installation and use

HARVIA
Sauna & Spa

Let's sauna.

Item number:
WKPC20S

EN
DE
FR
FI
SV
ET
LV
LT
RU
CS
PL
NL

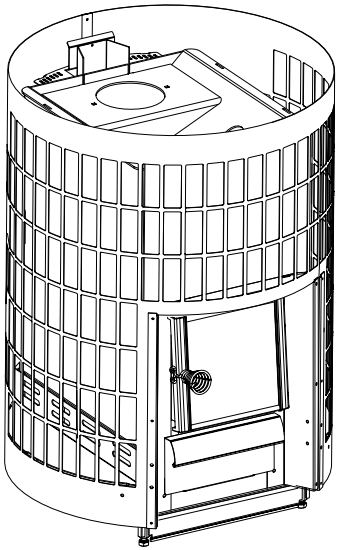

MADE IN FINLAND

Congratulations on your excellent choice of sauna heater!

A Harvia sauna heater works best and will serve you for a long time if used and maintained as described in this manual.

Please read the instructions before installing or using the sauna heater. Keep the guide for future reference. Installation and operating instructions can also be found on our website at www.harvia.com.

Contents

1. WARNINGS AND NOTES 3

2. CONTENTS OF DELIVERY AND PARTS OF THE SAUNA HEATER 9

3. DECLARATION OF PERFORMANCE 10

4. TECHNICAL INFORMATION 11

5. GENERAL INFORMATION 12

5.1. Choosing the right sauna heater model 12

5.2. Combustion air deflectors 12

5.3. Accessories 13

6. BEFORE INSTALLATION 14

6.1. Ventilation in the sauna room 14

6.2. Safety distances 15

6.3 Floor protection 16

6.4. Protective equipment 17

7. INSTRUCTIONS FOR INSTALLATION 18

7.1. First heating of the sauna heater 18

7.2. Adjustable Legs 18

7.3. Connecting the sauna heater to the chimney flue 19

7.4. Connecting the sauna heater to a Harvia steel chimney 21

7.5. Changing the hinges of the hatch to the other side 22

7.6. Flue gas heat regulators 22

7.7. Sauna heater stones 23

7.8. Stacking instructions for sauna heater stones 23

8. USER INSTRUCTIONS 25

8.1. Heating the sauna heater 26

8.2. Firewood 27

8.3. Sauna water 27

9. REGULAR UPKEEP AND MAINTENANCE 29

9.1. Sauna heater 29

9.2. Sweeping the sauna heater 29

9.3. Troubleshooting 31

10. SPARE PARTS 32

11. WARRANTY TERMS 32

EN

1. WARNINGS AND NOTES

Before using the device, please read the warnings and instructions carefully.

WARNING! Failure to heed this warning could result in serious injury or death.

CAUTION! Failure to heed this warning may result in minor or serious injury.

Installation

- Please follow the instructions for installation and use of the product when installing and using the sauna heater. All local regulations, including those referring to national and European Union standards, must be complied with when installing the fireplace. Guidance on fire safety regulations can be obtained from the local fire authority that approves the installation.
- The sauna heater is designed to heat the sauna room to the required temperature. Use for any other purpose is prohibited. Please keep the installation and operating instructions for future reference. After installation, the instructions for use should be given to the owner of the sauna or the person responsible for its use.
- Before actual use, a wood-burning sauna heater must be heated in a particular way as explained below. The purpose of the first heating procedure is to burn off the protective paint on the wood-burning sauna heater. As this results in a lot of smoke, it should be done outdoors. Once the sauna heater has cooled, remove any residual paint mechanically e.g. with a wire brush and a vacuum cleaner.
- Before installing the sauna heater, make sure that all safety distance requirements are met. There must be no electrical equipment, wiring or combustible materials within the safety distances of the sauna heater.
- The values given in the instructions for use of the sauna heater must be observed. Deviating from them will cause a fire hazard.
- The device must be installed in such a way that the warning texts remain easily readable after installation.
- A wood-burning sauna heater must be installed on a non-combustible base or floor with an adequate load-bearing capacity. If the

existing structure does not meet this prerequisite, use some boards, for example, that distribute the load.
- Before installation, ensure unimpeded access for cleaning the sauna heater and sweeping the chimney.
- Arrange for adequate ventilation in the sauna room by ensuring that the intake or exhaust air openings cannot be blocked accidentally.
- If a guardrail is installed around the sauna heater, the safety distances indicated in the operating instructions for the heater must be observed.
- If installing accessories suitable for the sauna heater, please follow the instructions for their installation and use.
- The adjustable legs may scratch the floor if the sauna heater is dragged on the floor.

EN

- Always wear protective gloves during installation and maintenance and when adding sauna stones.

Flue

- A wood-burning sauna heater cannot be installed to use a shared flue.
- Do not push the flue connection pipe too far into the flue, as the flue may become blocked.
- Seal the flue connection pipe to the opening in the fireproof wall with fireproof mineral wool or similar.

Sauna heater stones

- Rinse any stone dust off the stones before placing them in the heater.
- Ceramic ‘stones’ and soft soapstone are not allowed.
- Do not drop them in the stone space.
- Do not stack the stones too tightly to allow air to circulate between them.
- Do not pile a stack of stones on the heater.
- Do not place any objects or devices in or near the stone space of the sauna heater that could change the amount or direction of air flow through the heater.
- Direct heat radiation from any uncovered sauna heater body, owing to incorrect stone placement, can cause the materials to become dangerously hot even outside the safety distances.
- Rearrange the stones or replace broken ones at least every year.

Maintenance

- The fireplace, the flue, and the connection pipes should be swept at

regular intervals by a qualified professional.

- The flue and the connection pipes must be swept at regular intervals and especially when the sauna heater has not been used for a long time.
- As a result of incomplete combustion and failure to clean the flue regularly enough, soot can build up in the flue and may catch fire. See the instructions on what to do if a soot fire occurs.
- Modification of the wood-burning sauna heater is prohibited without permission from the manufacturer.
- A marine climate and other humid climates can corrode the metal surfaces of the sauna heater.

What to do if a soot fire occurs:

1. Close the ash box, the fire chamber and smoke damper (if one has been fitted).
2. Contact the local fire authority.
3. Do not attempt to put out a soot fire with water.
4. After a soot fire, both the fireplace and the flue must be checked by a chimney sweep before using the sauna again.

Instructions

- The owner or person in charge of the use of the sauna heater must ensure that all users know how to use it properly and understand the potential risks associated with it.
- Pay particular attention when using the sauna heater. The sauna heater stones and external surfaces can become extremely hot.
- Keep children away from the sauna heater.
- Before heating the sauna heater, check that there are no objects in the sauna or within the safety distances of the sauna heater that do not belong there.
- Please note that exhaust fans operating in the same room as the sauna heater may cause problems.
- Ensure adequate ventilation during the first few times you heat the sauna.
- The handles heat up when the sauna heater is heated. Use the tool supplied to open and close the heater door and ash box.
- Prolonged exposure to high temperatures can cause a fire hazard.
- The ash box of the wood-burning sauna heater should always be emptied before heating.
- Do not store the ash container near flammable materials, as the removed ash may contain glowing embers.
- The wood-burning sauna heater must not be used with the heater

door open.
- Ensure sufficient ventilation and combustion air by making sure that openings for them cannot be blocked accidentally.
- The natural draft variation caused by the seasons and weather conditions can be compensated for by adjusting the position of the ash box.
- Excessive draft will cause the whole sauna heater body to become red-hot, which will shorten its life span considerably.
- During bathing and when the sauna room is already heated, the ash box can be closed altogether or kept only slightly open to reduce combustion and wood consumption.
- Due to the risk of fire, do not use the sauna as a drying room for laundry.
- Hot stone chips falling from the sauna heater can damage floor coverings and cause a fire hazard.
- Make sure that the fire is properly extinguished after use.

EN

What to do in the event of overheating of the sauna heater or some other problem: WARNING! If a malfunction results in a fire, call the fire brigade.

1. Close the ash box and the fire chamber door.
2. Use water to cool any structures that are at risk of catching fire.
3. Cool the exterior of the sauna heater with water.
4. Keep an eye on the sauna heater until it has cooled down completely.
5. After a malfunction, both the fireplace and the flue must be checked before heating the sauna again.

Fuel

- The sauna heater must not be used to burn fuels with a high calorific value (e.g. chipboard, plastic, coal, briquettes, pellets), painted or treated wood, waste materials (e.g. PVC, textiles, leather, rubber, disposable nappies), garden waste (e.g. grass, leaves) or liquid fuels.
- Place the firewood into the fire chamber, leaving enough room for the combustion air to flow between the firewood. Place the biggest pieces of wood on the bottom and the smaller ones on the top.
- Place the kindling on the top of the firewood. After kindling, close the door. If necessary, adjust the draft by opening the ash box.
- Observe the correct wood quantities and sizes in the instructions. If necessary, allow the wood-burning sauna heater, the flue and the sauna room to cool down.

Sauna water

- When using the sauna, throw water only on the stones. Throwing water onto the hot steel surfaces may cause them to warp due to the intense temperature change when the water hits them.
- Do not throw or pour too much water on the sauna heater at once, as this could cause scalding splashes.
- Do not throw water on the sauna heater when someone is near it.
- Do not use a ladle with a capacity or more than 0.2 litres.
- Do not use any type of water other than that specified in the sauna heater instructions.
- If using sauna fragrances in the water, only use fragrances intended for sauna water and follow their instructions for use.

Using the sauna

- Do not leave children, individuals with reduced mobility, the ill or otherwise infirm in the sauna alone.
- Prolonged time in a hot sauna raises body temperature, which may be dangerous.
- Check with a doctor if you have any health restrictions related to sauna use.
- Consult the child health clinic before taking young children to the sauna.
- Be careful when moving in the sauna, as the sauna benches or floor surfaces can be slippery.
- Do not use a hot sauna under the influence of alcohol, medicines, narcotics or any other intoxicating substances.
- Do not sleep in a heated sauna.

Two people are always needed to move the sauna heater.

The sauna heater should always be transported in an upright position only.

The sauna heater can be lifted and moved by supporting it from the outer casing.

Always wear protective gloves during installation and maintenance and when adding sauna stones.

Remove the protective film from the sauna heater before use.

EN

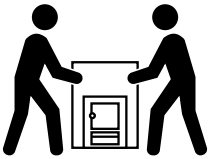

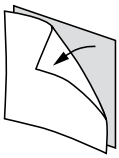

Checklist for installation of the sauna heater:

- ☐ Check that the heater is intact. Do not use a defective sauna heater.
- ☐ Make sure that the sauna heater model is suitable for the sauna where it is to be installed. (5.1. Choosing the right sauna heater model)
- ☐ Preheat the sauna heater. (7.1. First heating of the sauna heater)
- ☐ Check that the parts of the sauna heater (hatch, ash box, grate and air deflectors) are in place and correctly installed.
- ☐ Check that the flue duct and sweeping hatch covers are in place.
- ☐ Make sure that all safety distance requirements are met. (6.2. Safety distances)
- ☐ Check that the floor is adequately protected. (6.3 Floor protection)
- ☐ Ensure that the flue is airtight. (7.3. Connecting the sauna heater to the chimney flue)
- ☐ Make sure that the sauna heater stones are loaded according to the instructions. (7.8. Stacking instructions for sauna heater stones)
- ☐ Make sure that firewood is stored in a dry and safe place
- ☐ If accessories are to be installed, follow the product-specific instructions for installation and use.
- ☐ Please keep this manual for future reference.

2. CONTENTS OF DELIVERY AND PARTS OF THE SAUNA HEATER

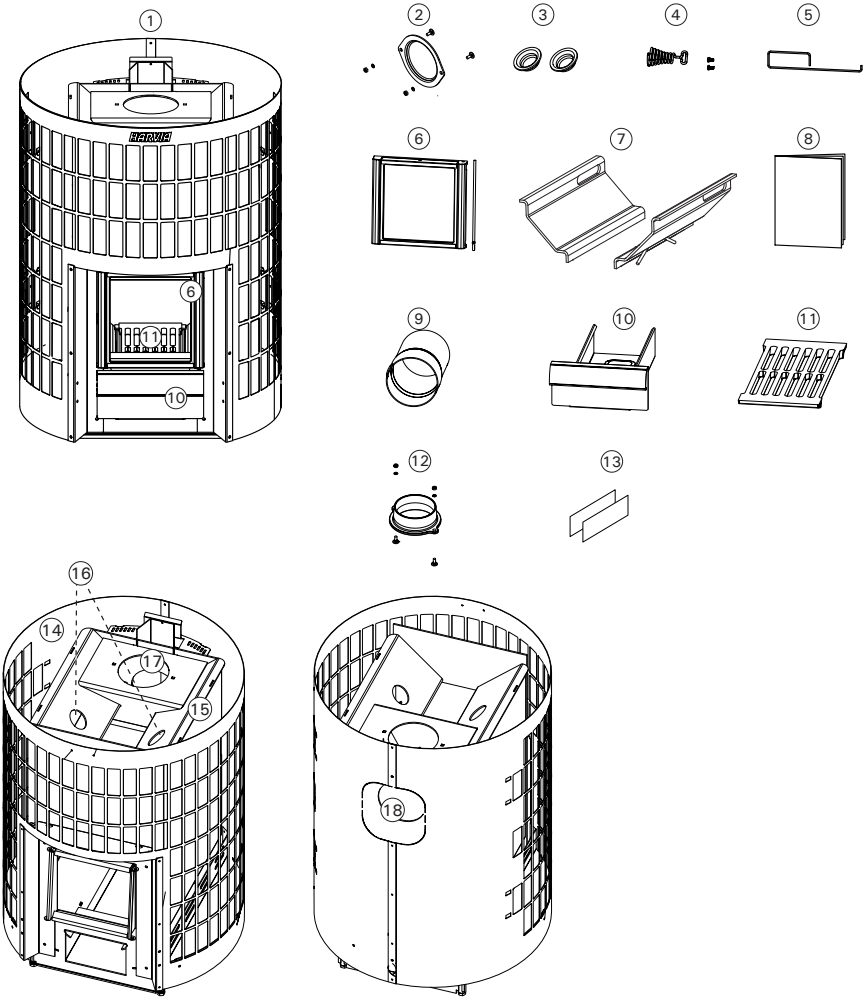

EN

1. Sauna heater	10. Ash box
2. Stop plug	11. Grate
3. Soot opening stopper (two)	12. Flue pipe connector
4. Handle	13. Flue gas heat regulator (pack of 2)
5. Auxiliary handle	14. Outer shell
6. Glass hatch	15. Frame
7. Combustion air deflectors	16. Soot openings
8. Instructions for installation and use	17. Top connection hole
9. Flue connection pipe	18. Rear connection hole

3. DECLARATION OF PERFORMANCE

Intended use	Multi firing sauna stoves fired by solid wood fuel	CE Harvia PL 12 40951 Muurame Finland 24 EN 15821:2010
The product conforms to the following standards	Products are tested in accordance to the methods described in the standard EN 15821:2010	
Notified body (identification number)	South-Eastern Finland University of Applied Sciences Ltd Kymilabs (NB2450)	

	DoP24PC20-01
Product type Declared performance – Essential characteristic	Cilindro 20 Steel WKPC20S
Fuel	Wood
Fire safety (initiation, risk to adjacent elements)	p
- Safety distances to combustible materials	▹ (6.2. Safety distances)
Emission of combustible products	p
Surface temperature	p
Release of dangerous substances	NPD
Cleanability	p
Flue gas temperature*	495 °C
Mechanical resistance	p
Sauna room heating output	17.2 kW
- carbon monoxide emission at 13 % O_2	p (3787 mg/m^3)
- carbon monoxide emission (%) at 13 % O_2	p (0,3 %)
- total efficiency	p (61,9 %)
- flue draught*	12 Pa
- ignition load	4 kg
- refuelling loads	4 kg
- ash box gap (after ignition phase)	45 mm
Durability	p
Flue gas mass flow*	17,7 g/s

* Stove door closed/
p Pass
NPD No performance determined

Muurame, Finland 25.9.2024		Teemu Harvia Product Development Director teemu.harvia@harvia.fi +358 207 464 038

Table 1.

EN

4. TECHNICAL INFORMATION

		Cilindro 20 Steel WKPC20S
Product information	Colour	Steel
	Heat output for sauna room	17 kW
Sauna room	Sauna volume min. (m^3)	8
	Sauna volume max. (m^3)	20
Flue connection	Temperature class required for the chimney flue	T600
	Connection hole diameter (mm)	115
	Minimum allowed internal diameter of the flue pipe (mm)	110
	Max. pipe length (m)	5
	Max. weight for upper connection (kg)	50
	Flue connection hight (in the middle of the opening), rear opening (mm)	550 (+0-30)
	Flue connection hight, top opening (mm)	670 (+0-30)
Safety distances (for combustible materials)	Safety distance to the ceiling, min. (mm)	1000
	Safety distance to the side, min. (mm)	150
	Safety distance to the front, min. (mm)	500
	Safety distance to the rear, min. (mm)	200
Dimensions	Width (mm)	557
	Depth (mm)	557
	Height (mm)	773 + 0-30
	weight (kg)	59
	Fire cover thickness (mm)	6
Stones	Quantity of stones (max. kg)	120
	Stone size (cm)	Ø10–15
Firewood	Maximum length of firewood pieces (cm)	39
	Firewood diameter (cm)	8-15
Accessories	Fireplace protection base	WL120
	Fireplace screen	WL200PC
	Smoke pipe guard	WL300PC
	Water heater	WP250PC
	Harvia steel pipe	WHP1500
	Heat radiation shield	WZ020130
	Connecting pipe	WZ020ST
	Corner smoke pipe	several models
	Masonry connector	WZ011115
	Smoke pipe penetration collar	WZ020115

Table 2.

EN

5. GENERAL INFORMATION

5.1. Choosing the right sauna heater model

Choose your sauna heater model carefully. Underpowered sauna heaters need to be heated for longer and at a higher temperature, which will eventually shorten their lifespan.

Please note that uninsulated wall and ceiling surfaces (e.g. brick, glass, tile or concrete) increase the need for sauna heater power. An additional 1.2 m^3 of volume must be added into the calculation for every square metre of wall and ceiling area of this kind. If the walls of the sauna are made of solid log, its volume should be multiplied by 1.5. Examples:

- A 10 m^3 sauna room with one brick wall that is 2 m wide and 2 m high is equivalent to a sauna room of about 15 m^3.
- A 10 m^3 sauna room with a glass door is equivalent to a sauna room of about 12 m^3.
- A 10 m^3 sauna room with solid log walls is equivalent to a sauna room of about 15 m^3.

If you need help choosing a sauna heater, please contact your dealer, a factory representative or visit our website (www.harvia.com).

EN

5.2. Combustion air deflectors

The sauna heater has a combustion-enhancing grate system: combustion air deflectors located in the firebox direct some of the air to the top of the fire chamber, directly over the fire(Figure 2. Combustion air deflectors). This also causes the combustion gases to burn and produce even more heat. The fuel (8.2. Firewood) and the ignition method (8.1. Heating the sauna heater) also have a considerable impact on combustion efficiency and flue gas emissions.

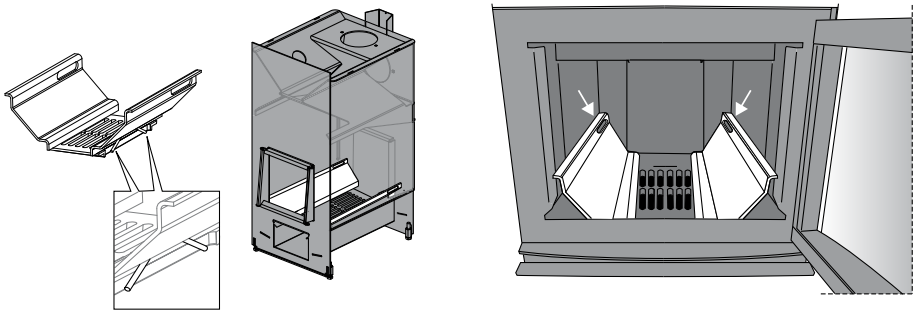

Figure 2. Combustion air deflectors

5.3. Accessories

If you want to install accessories for the sauna heater, always follow the instructions for each specific accessory when installing or using them.

A. Harvia steel pipe WHP1500. (7.4. Connecting the sauna heater to a Harvia steel chimney)
B. Water heater WP250PC. Mounted on top of the upper connection hole. If you are using a fireplace screen or other protection that does not extend to protect surrounding combustible materials against heat radiation from the connecting pipe between the water heater and the chimney flue, a heat radiation shield must be installed over the connecting pipe.
C. Heat radiation shield WZ020130. Installed around the smoke pipe. The safety distance from an unprotected smoke pipe to combustible materials is 500 mm. If you will be using a heat radiation shield, the safety distance is 250 mm.
D. Connecting pipe WZ020ST. Raises the water heater to the right height
E. Corner smoke pipe. Several models.
F. Masonry connector WZ011115. The connector is sealed with masonry into the flue opening, and no other sealing is required. There is a seal on the inside.
G. Smoke pipe penetration collar WZ020115. Covers the edges of the flue opening and the sealing gap in the wall. Made of stainless steel. This product is two-piece, making it suitable for a variety of differently angled smoke pipes.
H. Cilindro fireplace protection base WL120. (6.4. Protective equipment)
I. Cilindro fireplace screen WL200PC. (6.4. Protective equipment)
J. Cilindro smoke pipe guard WL300PC. (6.4. Protective equipment)

EN

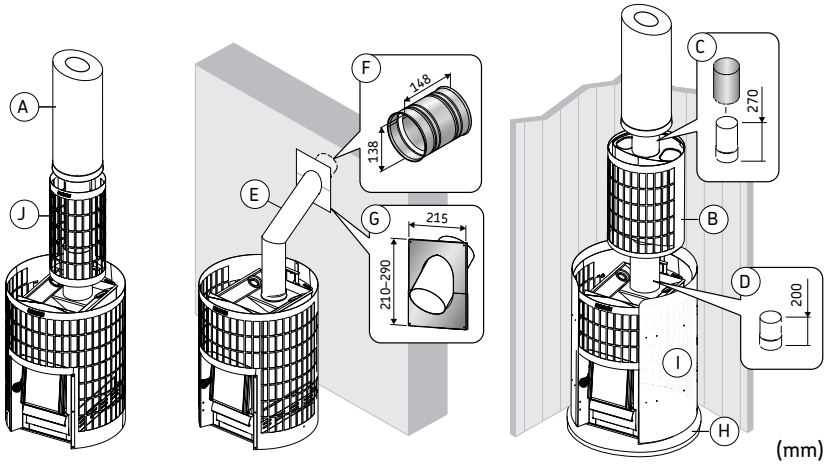

Figure 3. Accessories (dimensions in mm)

6. BEFORE INSTALLATION

WARNING! Always observe the values given in the instructions for use of the sauna heater. Deviating from them will cause a fire hazard.

WARNING! When installing the fireplace, all local regulations, including those referring to national and European Union standards, must be complied with. Guidance on fire safety regulations can be obtained from the local fire authority that approves the installation.

WARNING! The sauna heater is designed to heat the sauna room to the required temperature. Use for any other purpose is prohibited.

6.1. Ventilation in the sauna room

EN

Arrange for adequate ventilation in the sauna room by ensuring that the intake or exhaust air openings cannot be blocked accidentally.

The ventilation in the sauna room should be set up as follows:

Gravity ventilation(Figure 4. Gravity ventilation)

A. Fresh supply air is directed to the floor near the sauna heater and extracted as far away from the sauna heater as possible, close to the ceiling.

B. Because the sauna heater circulates air efficiently, the exhaust vent mainly serves to remove moisture from the sauna after bathing.

Mechanical ventilation (Figure 5. Mechanical ventilation)

A. Fresh supply air is conveyed into the room about 500 mm above the sauna heater and extracted close to the floor level, e.g. from under the benches

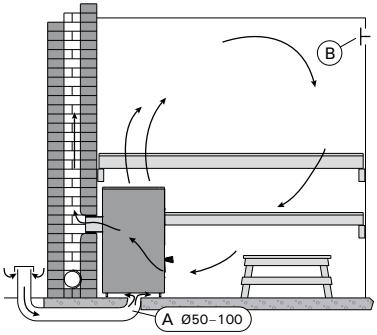

Figure 4. Gravity ventilation

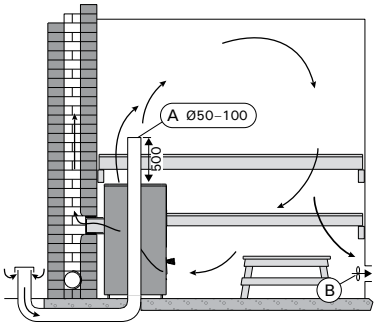

Figure 5. Mechanical ventilation

6.2. Safety distances

WARNING! Before installing the sauna heater, make sure that all safety distance requirements are met. There must be no electrical equipment, wiring or combustible materials within the safety distances of the sauna heater.

A. Ceiling. The minimum safety distance from the top of the sauna heater to the ceiling.
B. Combustible walls and ceilings. The minimum safety distances between the sauna heater and combustible materials.
C. Masonry walls. The minimum safety distances when the front and one side of the sauna heater are unobstructed for air circulation.
D. Masonry walls. Minimum safety distances when the sauna heater is installed in a wall recess.

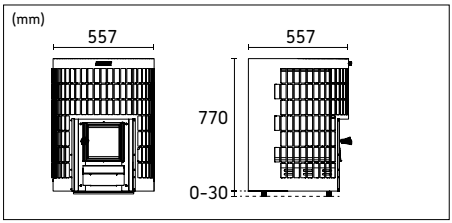

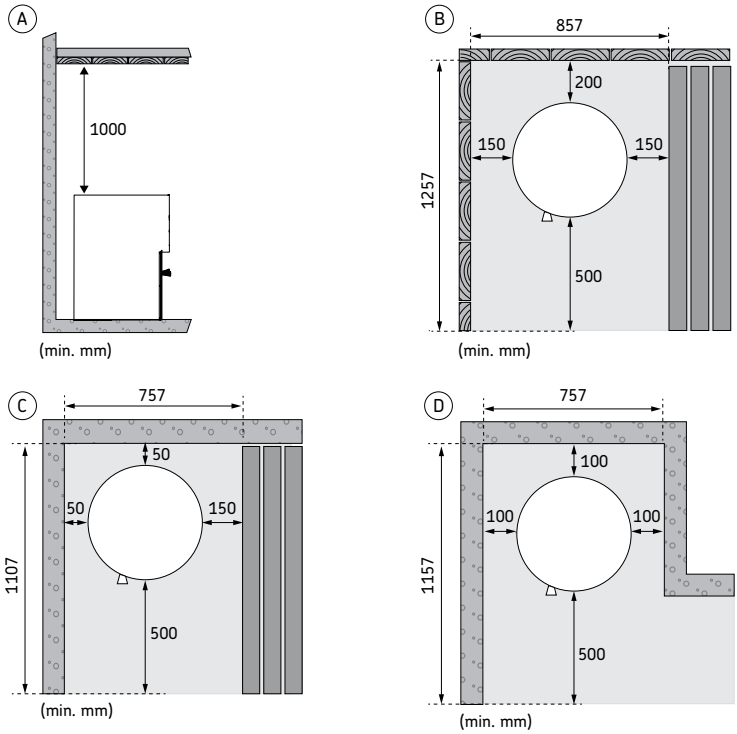

Figure 6. Safety distances

EN

6.3 Floor protection

The floor underneath the sauna heater must have a sufficient load-bearing capacity. If the existing structure does not meet this prerequisite, use some boards, for example, that distribute the load.

Light-coloured flooring materials will get dirty from ash, stones and metal shavings falling from the sauna heater. Use dark floor coverings and jointing materials.

A. Concrete floor, no tiling. If the concrete slab is at least 60 mm thick, the sauna heater can be installed directly on concrete floor. Make sure that there are no electrical wires or water pipes in the concreting under the heater.
B. Tiled floor. Tile adhesives and grouting and waterproofing materials used under tiles are not resistant to heat radiation from the sauna heater. Protect the floor with a Harvia fireplace protection base (6.4. Protective equipment) or similar heat radiation protection.
C. Flammable floor. Protect the floor with a Harvia fireplace protection base (6.4. Protective equipment). Protect the flammable floor outside the hatch with a spark protector.

EN

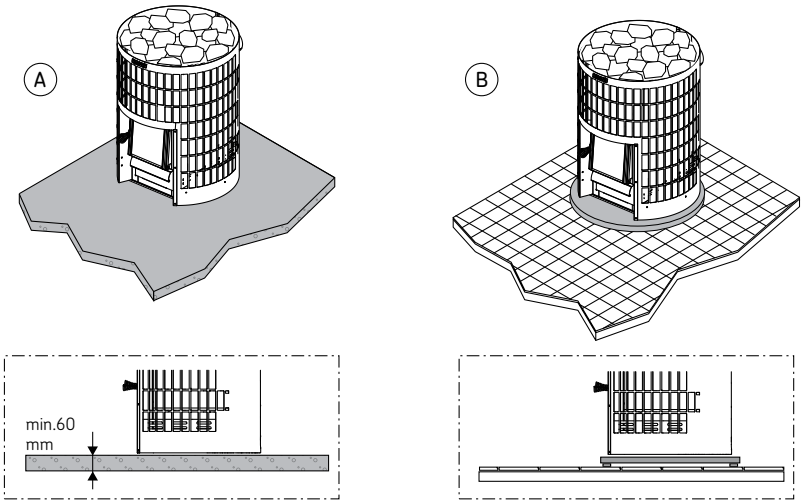

Figure 7. Floor protection

6.4. Protective equipment

If you want to install accessories for the sauna heater, always follow the instructions for each specific accessory when installing or using them.

1. Cilindro fireplace protection base WL120.
2. Cilindro fireplace screen WL200PC. A protective wall that is attached to the sauna heater. Equivalent to simple lightweight protection.
3. Cilindro smoke pipe guard WL300PC. Installed around the smoke pipe and filled with stones. Suitable for both straight and angled corner smoke pipes.

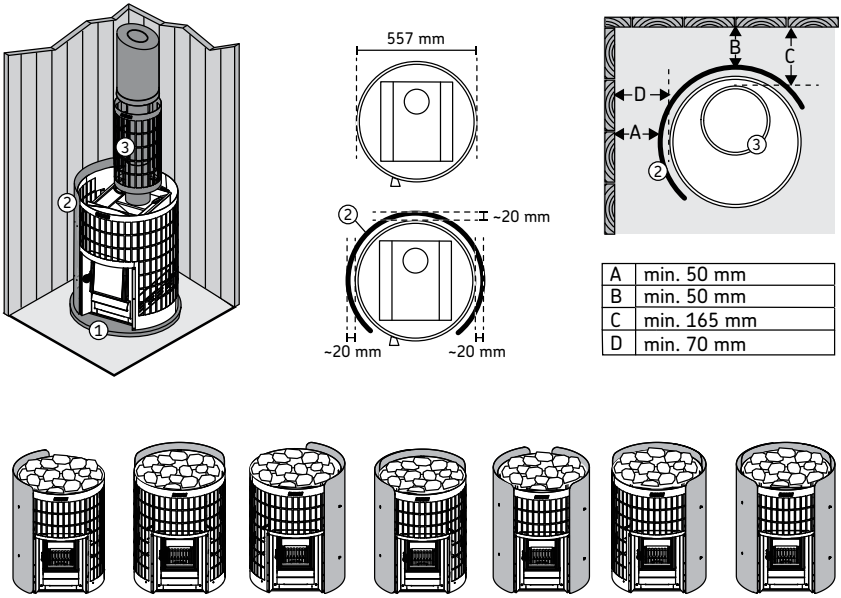

A	min. 50 mm
B	min. 50 mm
C	min. 165 mm
D	min. 70 mm

Figure 8. Protective accessories (dimensions in mm)

EN

7. INSTRUCTIONS FOR INSTALLATION

7.1. First heating of the sauna heater

Before the heater can be used in a sauna, it must be heated once in an outdoor environment.

The purpose of this first heating of a wood-burning sauna heater is to burn off the protective paint on it. This process produces a lot of smoke.

1. Heat the sauna heater frame outside until it no longer produces smoke. If smoke pipes are to be used, they should be installed in place to create a draught. You do not need to place the stones in the sauna stove before this first heating. Let the frame cool. Remove any paint residues mechanically, e.g. with a wire brush and vacuum cleaner. (If you are not able to heat the stove outdoors, start from step 2. In this case, there frame will produce more smoke when the stove is heated up in the sauna.)
2. Install the sauna heater according to the instructions. Load the stones into the sauna heater(7.8. Stacking instructions for sauna heater stones)
3. Heat the sauna to a normal temperature. Make sure the sauna is well ventilated, as the frame may still produce smoke and odours. When no more smoke forms, the sauna heater is ready for use.

EN

7.2. Adjustable Legs

The adjustable feet could scratch the floor surface if the stove is moved on the floor.

The adjustable legs enable the stove to be installed firmly on an inclined floor. The adjustable range is 0–30 mm. Unscrew the adjustable feet to an extent that allows them to be adjusted using a wrench (17 mm) when the stove is in position.

7.3. Connecting the sauna heater to the chimney flue

A wood-burning sauna heater cannot be installed to use a shared chimney flue.

Make a hole in the firewall for the flue connection. If you will be using a floor protection element, take its height into account when you determine at which height to drill the hole. The hole should be slightly larger than the chimney pipe. A suitable sealing gap around the connection pipe is about 10 mm. The inside corners of the flue opening should be rounded to allow flue gases to freely enter the chimney. Harvia also offers a variety of accessories to make installation easier (5.3. Accessories)

Connecting the sauna heater to a masonry flue through the rear opening

- Attach the flue pipe to the rear connection hole of the sauna heater. Make sure that the connection pipe is tightly installed and firmly closed.
- Do not push the flue connection pipe too far into the flue, as the flue may become blocked. Shorten the pipe if necessary.
- Seal the flue connection pipe to the opening in the chimney flue with fireproof mineral wool or similar. Make sure the chimney connection is tight, and add fire-resistant mineral wool if necessary.

EN

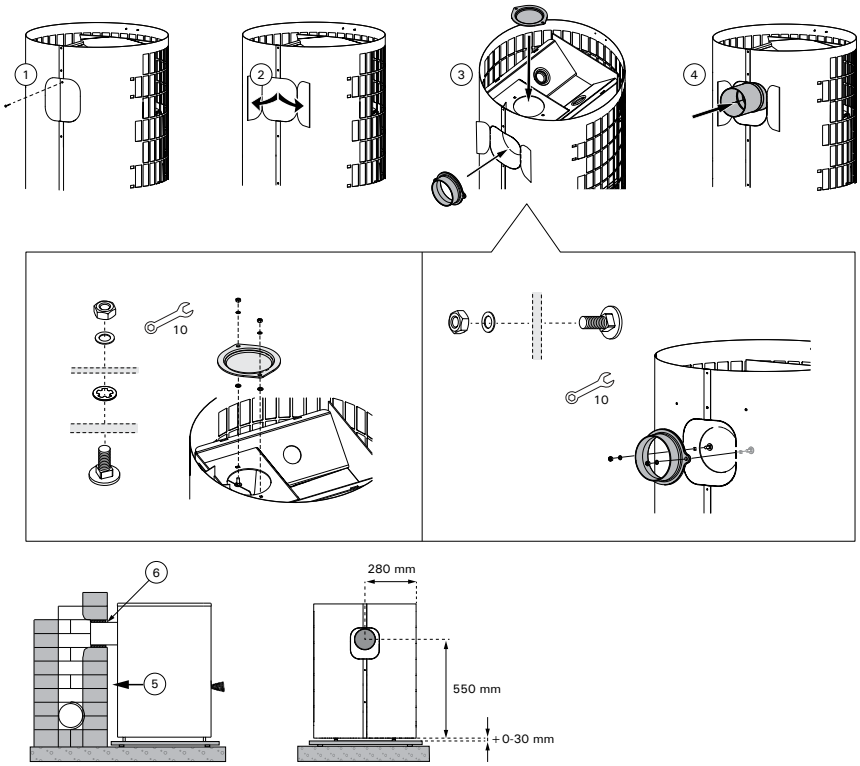

Figure 9. Connecting the sauna heater to a masonry flue through the rear opening.

Connecting the sauna heater to the chimney flue through the top opening

- For the top connection, you will need a 45° or 90° angled smoke pipe. (5.3. Accessories)
- Attach the flue pipe to the top hole of the sauna heater. Make sure that the connection pipe is tightly installed and firmly closed.
- Push the sauna heater into place. Do not push the flue connection pipe too far into the flue, as the flue may become blocked. Shorten the pipe if necessary.
- Seal the flue connection pipe to the opening in the fireproof wall with e.g. fireproof mineral wool. Make sure the chimney connection is tight, and add fire-resistant mineral wool if necessary.

EN

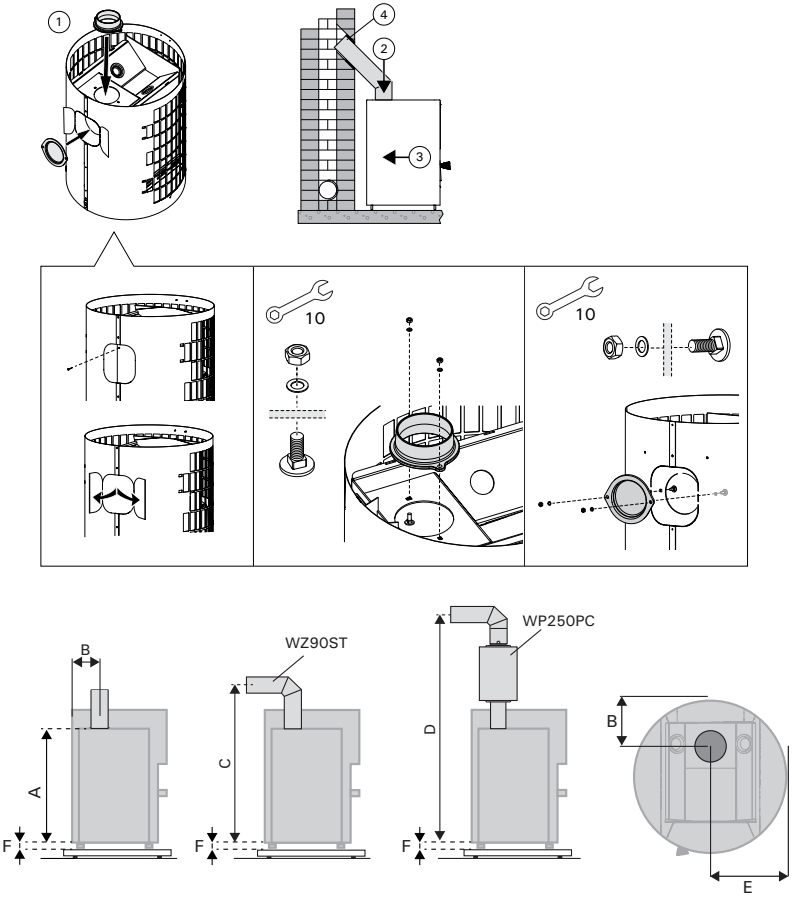

	A (mm)	B (mm)	C (mm)	D (mm)	E (mm)	F (mm)
Cilindro 20	670	150	~850	~1720	280	0-30

Figure 10. Connecting the sauna heater to a masonry flue through the top opening.

7.4. Connecting the sauna heater to a Harvia steel chimney

A CE-marked Harvia steel chimney with stainless steel smoke pipes and fire-insulated chimney can be used for flue gas extraction. The cross-section of the chimney is circular.

- Attach the steel smoke pipe to the top hole of the sauna heater. The smoke pipe must be tightly installed and firmly closed. See the steel pipe installation guide for more detailed instructions.

If a fireplace screen is used around the sauna heater, the insulated part of the pipe must start at or below the level of the upper surface of the screen.

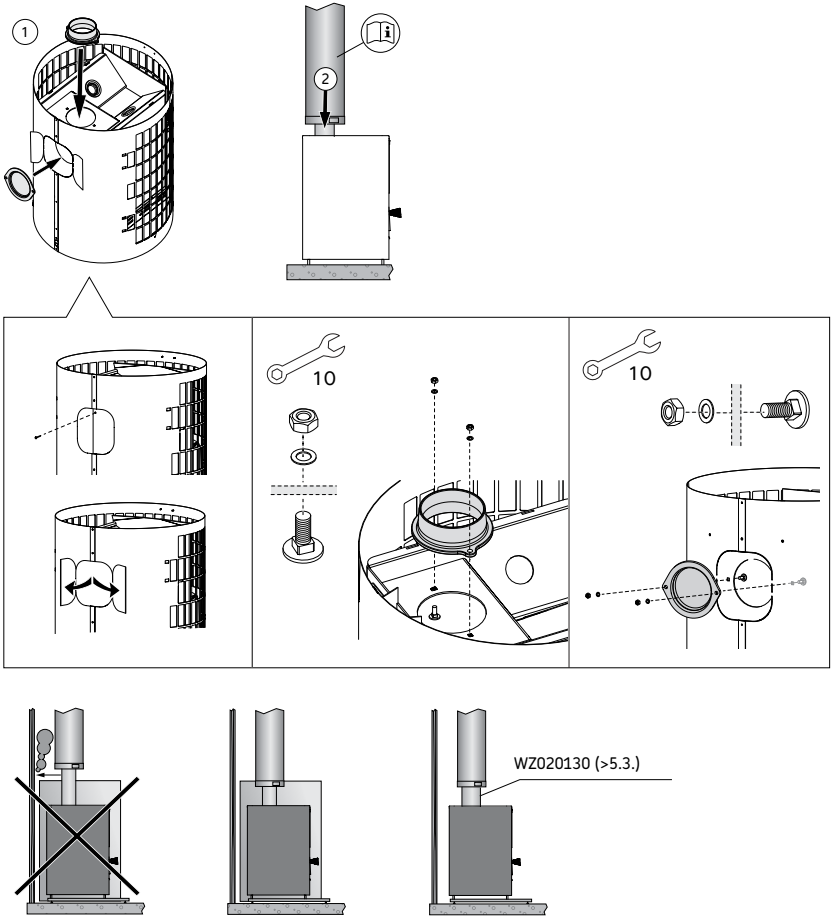

Figure 11. Connecting the sauna heater to a Harvia steel chimney

EN

7.5. Changing the hinges of the hatch to the other side

The firebox chamber hatch can be installed to open either to the right or left. See figure 12.

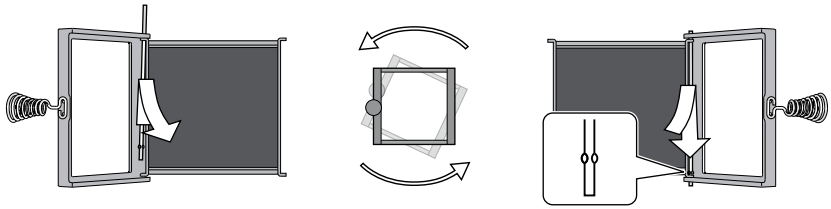

Figure 12. Changing the hinges of the hatch to the other side

7.6. Flue gas heat regulators

EN

The purpose of the flue gas heat regulator is to reduce the draught in the chimney and lower the maximum flue gas temperature in the chimney. They also extend the lifetime of the sauna heater. The flue gas temperature is determined based on the T600 chimney class for wood heaters according to the EN 15821:2010 standard. The maximum flue gas temperature must not exceed the T-rating of the pipe.

Installation

Install two flue gas heat regulators if required by the chimney temperature rating (e.g. T600). The regulations on chimneys vary by country and region. Check the regulations with your local building inspector. Two flue gas heat regulators are installed in the fire chamber ducts. Always check the flue gas heat regulators whenever maintenance or fumigation work is performed.

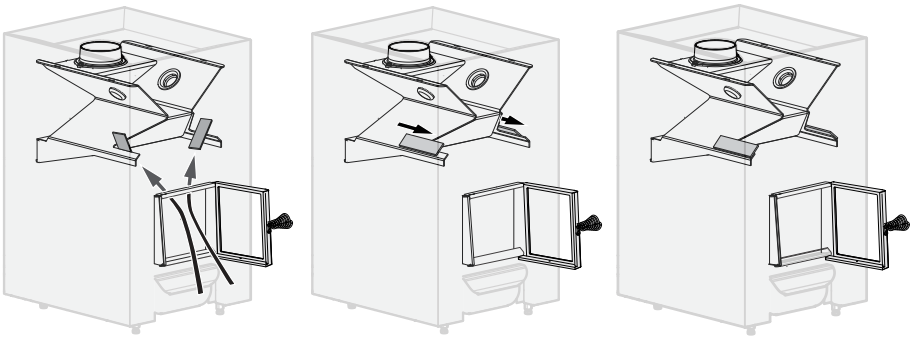

	Maximum flue gas temperature in the EN 15821:2010 safety test with flue gas heat regulators
Cilindro 20 WKPC20S	589,7 °C

Figure 13. Flue gas heat regulators

7.7. Sauna heater stones

Sauna heater stones are important for the safety of the sauna heater. In order for the warranty to remain valid, the user is responsible for proper maintenance of the sauna heater's stone space in accordance with the specifications and instructions.

- Suitable sauna stone materials are peridotite, olivine diabase, olivine and vulcanite.
- A suitable stone size is 10–15 cm in diameter.
- Only use cleavage surface and/or rounded stones for your sauna heater.
- Ceramic stones and decorative stones may only be used if they have been approved by the manufacturer and are used according to the their instructions.
- Note that decorative stones are only suitable on the top layer of the stone space. Decorative stones must be placed loosely to ensure sufficient air circulation. Place any decorative stones so that they do not touch the heating elements of an electric sauna heater. In the case of a wood-burning sauna heater, make sure the stones do not touch the sauna heater's hot inner frame.
- The warranty does not cover any defects that have been caused by the use of decorative stones or by sauna stones not recommended by the manufacturer.

EN

7.8. Stacking instructions for sauna heater stones

Always ensure that the sauna heater frame is not visible between the stones. Direct heat radiation from a bare frame can make materials outside the protective distances dangerously hot.

Always wear protective gloves when placing the stones in the sauna heater. Metal parts may have sharp edges that can otherwise cause cuts.

The correct placement of the stones ensures efficient operation of the sauna heater and the best possible sauna experience.

(Figure 14. Placing of sauna stones)

1. Rinse any stone dust off the stones before placing them in the heater.
2. Place stones one by one. Do not drop them in the stone space.
3. Place large, round stones at the bottom of the stone space.
4. Position flat stones on the outer edges of the heater. The vertical arrangement of the stones ensures good air circulation and supports the heater's structure. Lay the stones evenly in compact layers.
5. Place roundish stones on top of the lid of the sauna heater's fire chamber. Position the stones loosely.
6. Fill the upper part with stones also. Position the stones loosely.
7. Make sure the stones are at about the same level as the top of the sauna heater. Do not stack the stones into a pile on top of the heater
8. Finally, check that the sauna heater frame is not visible between the stones. Stack the stones more tightly if necessary.

EN

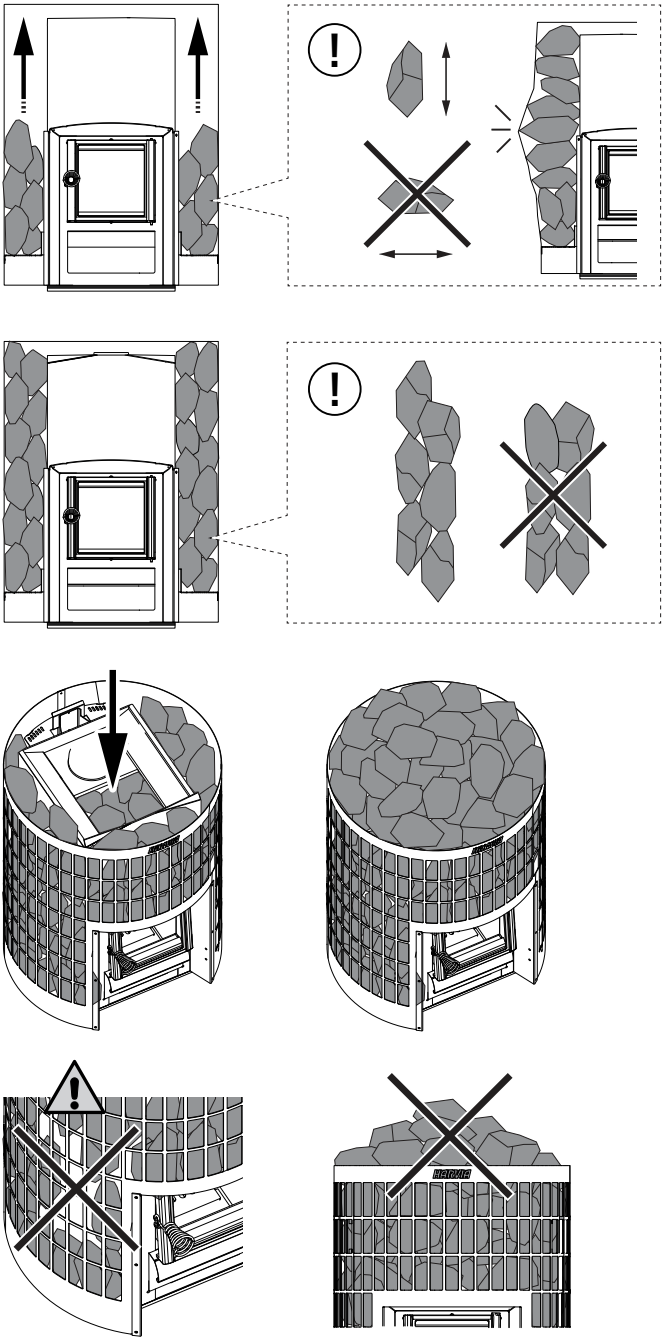

Figure 14. Placing of sauna stones

8. USER INSTRUCTIONS

Read the instructions carefully before using the sauna heater.

Before using the sauna heater, check that there are no unsuitable objects in the sauna or within the safety distances of the sauna heater. Please note that exhaust fans operating in the same room as the sauna heater may cause problems.

WARNING! Prolonged exposure to high temperatures can cause a fire hazard.

WARNING! Never leave the sauna unattended when it is warm.

WARNING! Make sure that the fire is properly extinguished after use.

Before using the sauna heater, check the instructions for accessories such as a water heater.

The owner or person in charge of the use of the sauna heater must ensure that all users know how to use it properly and understand the potential risks associated with it.

Prolonged time in a hot sauna raises body temperature, which may be dangerous.

Take care with the sauna heater when it is hot. The stones and metal parts of the sauna heater are hot enough to burn the skin.

To avoid the risk of burns, do not throw water on the sauna heater when anyone is near it.

Keep children away from the sauna heater.

Do not leave children, individuals with reduced mobility, the ill or otherwise infirm in the sauna alone.

Check with a doctor if you have any health restrictions related to sauna use.

Consult the child health clinic before taking young children to the sauna.

Be careful when moving in the sauna, as the sauna benches or floor surfaces may be slippery.

Do not go into a hot sauna if you are under the influence of alcohol, medicines, narcotics or any other intoxicating substances.

Do not sleep in a heated sauna.

A marine climate and other humid climates can corrode the metal surfaces of the sauna heater.

Due to the risk of fire, do not use the sauna as a drying room for laundry.

8.1. Heating the sauna heater

1. **Check the condition of the sauna heater and firebox.** Make sure that the sauna heater grate and the glass door are intact.
2. **The ash box of a wood-burning sauna heater must always be emptied before heating.** A full ash box will disrupt air circulation and combustion. The combustion air introduced through the ash box cools the grate and extends its lifetime. Purchase a metal container for the ashes, preferably one with a base. **NOTE: Do not store the ash container near flammable materials, as the removed ash may contain glowing embers.**
3. **Place the firewood into the fire chamber, leaving enough room for the combustion air to flow between the firewood.** Place the biggest pieces of wood on the bottom and the smaller ones on the top. Use logs with a diameter of about 8–12 cm (note the amount of starting firewood, Table 1).
4. **Place the kindling on top of the firewood.** Starting the fire from the top causes the least smoking.
5. **Light the kindling and close the hatch.** Adjust the draught by leaving the ash box slightly open. A wood-burning sauna heater must not be used with the sauna heater door open.
   - Note: The handles heat up when the sauna heater is heated. Use the tool provided to open and close the hatch and ash box.
   - When starting to make a fire in the sauna heater, it is advisable to keep the ash box slightly open to ensure that the wood will ignite properly.
   - Excessive draught will cause the whole sauna heater body to become red hot, which will shorten its life span considerably.
   - During sauna bathing and when the sauna room is already heated, the ash box can be closed altogether or kept only slightly open to reduce combustion and wood consumption. See (Table 1.) for the optimal gap.

EN

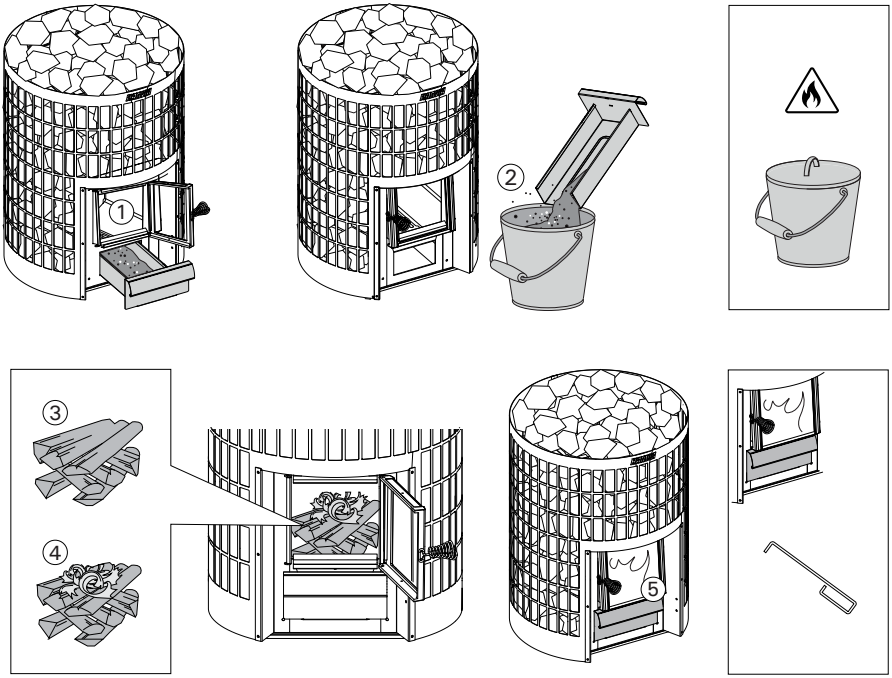

Figure 15. Heating the sauna heater

6. **If necessary, put more wood into the fire chamber when the embers start to die down.** Use logs of about 12–15 cm in diameter. A couple of logs at a time is enough to maintain the sauna temperature (note the amount of fuel added; see Table 1).
    - If the sauna heater is heated too much (e.g. several full sauna heaters in a row), the heater and chimney flue will overheat. Overheating shortens the life of the sauna heater and can also cause a fire hazard.
    - As a rule, the temperature should never exceed 100 ºC.
    - See the heating instructions for the proper amount of wood to use. If necessary, allow the wood-burning sauna heater, the flue and the sauna room to cool down.
7. **After use, stop adding firewood and allow the fire to go out. Always make sure that the fire is goes out entirely.**

8.2. Firewood

Observe the correct wood quantities and sizes in the instructions. If necessary, allow the wood-burning sauna heater, the flue and the sauna room to cool down.

EN

Dry wood is the best fuel for a sauna heater. Dry pieces of firewood make a clinking sound when struck together. The moisture content of wood is important both for clean burning and for efficient heating of the sauna heater. Birch bark and newspaper are two materials that make good kindling.

Make sure there is a dry and safe place to store the firewood and kindling, such as a shed or storage room.

The following materials should never be burned in the sauna heater:
- fuels with a high calorific value (e.g. chipboard, plastic, coal, briquettes, pellets)
- painted or impregnated wood
- waste (e.g. PVC, textiles, leather, rubber, disposable nappies)
- garden waste (e.g. grass, tree leaves)
- liquid fuels

8.3. Sauna water

- When using the sauna, throw water only on the stones. Throwing water onto the hot steel surfaces may cause them to warp due to the intense temperature change when the water hits them.
- Do not use any type of water other than that specified in the sauna heater instructions.
- If using sauna fragrances in the water, only use fragrances intended for sauna water and follow their instructions for use.
- Only use clean water for domestic use as sauna water. See Table 3.

Properties of water	Effects	Recommendation
Organic impurity	Colour, taste, precipitates	<12 mg/l
Iron content	Colour, smell, taste, precipitates	<0,2 mg/l
Manganese content (Mn)	Colour, smell, taste, precipitates	<0,10 mg/l
Water hardness: the main ingredients are calcium (Ca) and magnesium (Mg)	Precipitates	Ca: <100 mg/l Mg: <100 mg/l
Chloridic water	Corrosion	Cl: <100 mg/l
Chlorinated water	Health risk	Use prohibited
Sea water	Rapid corrosion	Use prohibited
Arsenic and radon concentrations	Health risk	Use prohibited

Table 3.

EN

9. REGULAR UPKEEP AND MAINTENANCE

9.1. Sauna heater

Regularly checking and maintaining your sauna heater will improve safety, extend its lifetime and ensure the best possible steam.

- Before each use, empty the ash box and check the condition of the sauna heater hatch and firebox. (8.1. Heating the sauna heater)
- Soot and ash that have accumulated in the flues of the sauna heater must be regularly removed through the soot openings. Always check local regulations. Regular sweeping ensures safe use of the sauna heater and chimney flues, prevents fires and improves sauna heater efficiency. (9.2. Sweeping the sauna heater)
- Remove the stones and check the condition of the sauna heater body regularly. Due to intense temperature fluctuations, the sauna heater frame can deform to some extent during use. Check that there are no holes in the sauna heater and ensure there are no tears in the seams. Any tears must be repaired or the sauna heater must be replaced.
- Replace the sauna heater stones at least once a year, or more often if the sauna is used very frequently. Due to intense thermal cycling, the sauna heater stones will gradually deteriorate and crumble during use. Remove any stone debris that has accumulated in the stone space, and replace any broken stones.
- Wipe the sauna heater with a damp cloth to remove dust and dirt.

EN

9.2. Sweeping the sauna heater

Regular sweeping of fireplaces and chimney flues is an important part of fire safety. As a result of incomplete combustion and failure to clean the flue regularly enough, soot can build up in the flue and may catch fire.

What to do if a soot fire occurs:
1. Close the ash box, the fire chamber and smoke damper (if one has been fitted).
2. Contact the local fire authority.
3. Do not attempt to put out a soot fire with water.
4. After a soot fire, both the fireplace and the flue must be checked by a chimney sweep before using the sauna again.

The chimney flue and the connection pipes must be swept at regular intervals, and especially when the sauna heater has not been used for a long time.

All sweeping must comply with national, regional and local regulations.

1. Before sweeping, cover surroundings as necessary to protect them from soot
2. Remove the stones from the sauna heater before sweeping in order to assess the condition of the frame.
3. Remove both of the soot opening plugs. If the sauna heater is connected to the chimney flue via the rear connection, remove the main connection stop plug as well.
4. Sweep the combustion flues of the sauna heater.
5. Use a metal brush or metal scoop to remove ash from the combustion flues.
6. Also remove ash from the ash box and from under the grate.
7. Check the seams and surfaces of the combustion flues of the sauna heater. There must be no gaps in the frame. Check the surfaces of the firebox from inside the sauna heater and the fire chamber lid from the stone side.
8. The sauna heater frame and its components change shape to some degree during use. Check that there is nothing to prevent safe use of the sauna heater. For example, make sure that the air deflector plates stay in place and that the grate is not too twisted.
9. After sweeping, make sure that the soot opening stops, stop plugs and ash box are put back in place properly. If the sauna heater features flue gas heat regulators that limit the maximum flue gas temperature, make sure these are in place. Check that the flue joint is intact and tight.
10. Place the stones back into the sauna heater. Check the condition of the stones. Stones that are in poor condition, dirty or calcified must be replaced with new ones. (7.8. Stacking instructions for sauna heater stones)

EN

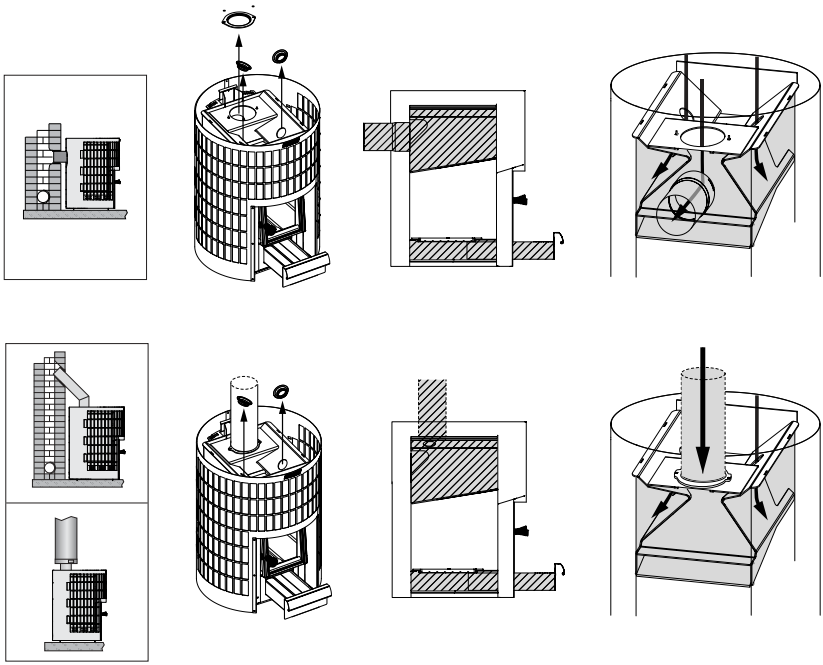

Figure 16. Sweeping the sauna heater

9.3. Troubleshooting

There is no draft in the flue. Smoke is coming into the sauna.

- The flue joint is leaking. Seal the joint (7.3. Connecting the sauna heater to the chimney flue)
- The brick chimney is cold or damp.
- Negative pressure in the dwelling caused by a cooker hood or other appliance. Make sure that there is make-up air.
- Negative pressure in the sauna room caused by wind or certain types of weather. Ensure the supply of make-up air, e.g. by opening the nearest external door or window during the ignition.
- More than one fireplace is being used at the same time. Make sure that there is make-up air.
- The ash box is full.
- The flues of the sauna heater are blocked (9.2. Sweeping the sauna heater)
- The chimney connection pipe is too deep in the chimney (7.3. Connecting the sauna heater to the chimney flue)
- There is a hole or tear in the frame or seam of the sauna heater caused by use. In this case, have the sauna heater repaired or replaced.
- The sauna heater's rear connection hole plug is not in place when the heater is connected to the flue through the top connection hole. (7. instructions for installation)

The sauna will not heat up.

- The sauna is too large for the heating capacity of the sauna heater (4. Technical information)
- The sauna has a large amount of uninsulated wall surface (5.1. Choosing the right sauna heater model)
- The firewood or kindling are wet or otherwise of poor quality (8.2. Firewood)
- The draft in the chimney is weak.
- The flues of the sauna heater are blocked (9.2. Sweeping the sauna heater)

The stones do not heat up.

- The sauna is too small for the heating capacity of the sauna heater (4. Technical information)
- The draft in the chimney is weak.
- The firewood or kindling are wet or otherwise of poor quality (8.2. Firewood)
- The flues of the sauna heater are blocked (9.2. Sweeping the sauna heater)
- Check how the stones are loaded on the heater. Remove any accumulated stone debris and sauna heater stones that are too small (less than 10 cm in diameter). Replace the disintegrating stones with large, intact stones. (7.8. Stacking instructions for sauna heater stones)

The sauna heater produces an odour.

- See point (7.1. First heating of the sauna heater)
- A hot sauna heater may intensify odours mixed in the air, but the sauna or the heater do not produce odours themselves. Examples: paints, glues, heating oil and spices.

Wooden surfaces in the sauna room are darkening

- It is normal for the wooden surfaces in the sauna room to darken over time. Darkening may be accelerated by sunlight, heat from the sauna heater, protective materials for wall surfaces (the protective materials are not very heat resistant), fine particles of stone crumbling from the sauna heater stones and rising with the air currents, and smoke entering the sauna, e.g. when firewood is added.

Charring or blackening of wooden surfaces in the sauna room

- Stop using the sauna heater and check the safety distances. Make sure the sauna heater is the right size for your sauna. (6.2. Safety distances) (4. Technical information)

10. SPARE PARTS

spareparts.harvia.com

11. WARRANTY TERMS

www.harvia.com

EN

Let’s sauna.

@ harviaglobal

GLOBAL
Harvia Finland
Teollisuustie 1-7
40951 Muurame
FINLAND
T +358 207 464 000
harvia@harvia.com

CENTRAL EUROPE
Harvia Austria GmbH
Wartenburger Straße 31
4840 Vöcklabruck
AUSTRIA
T +43 (0) 7672 22 900-50
info@harvia.com